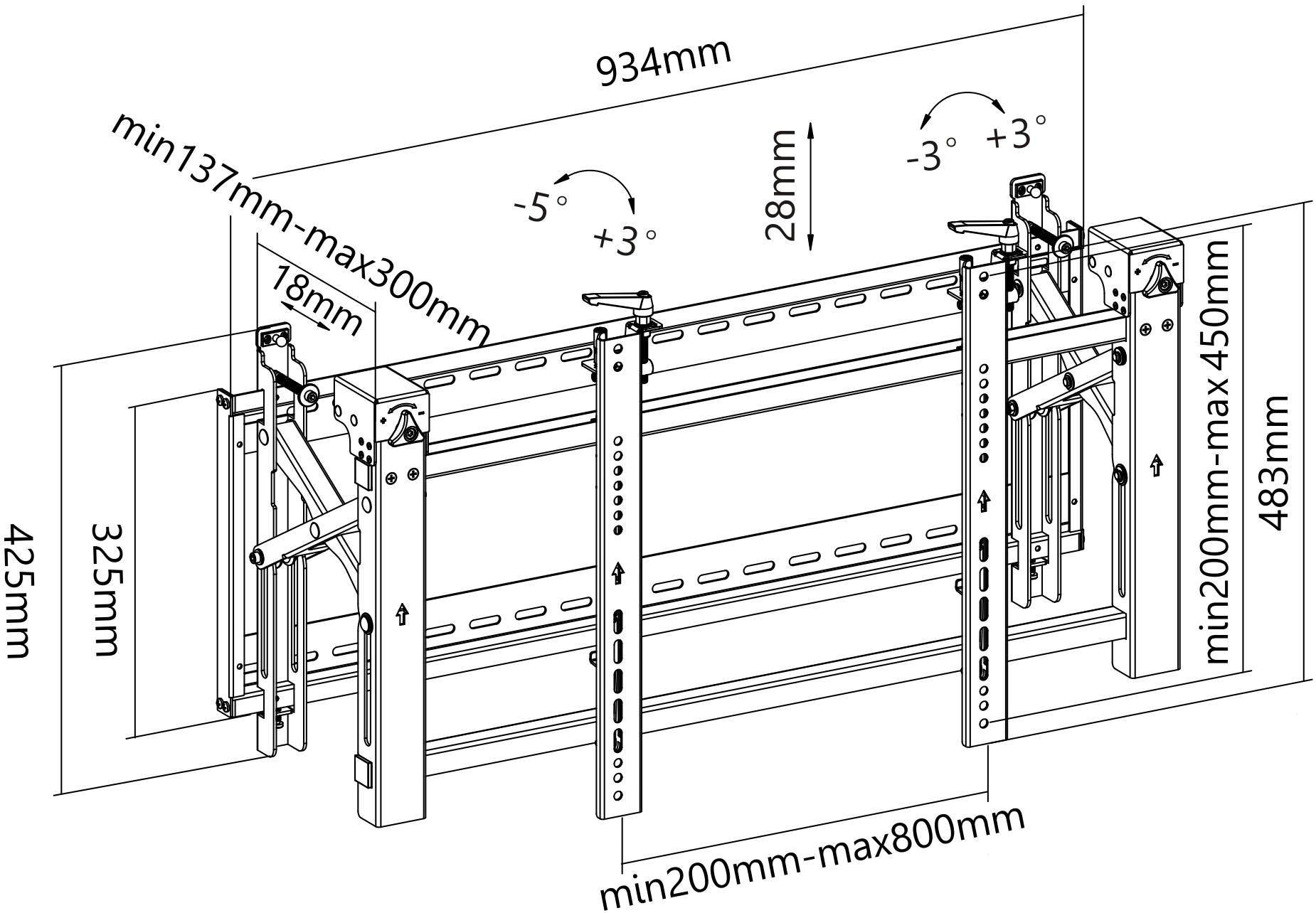
934mm
min137mm-max300mm
18mm
-5°
+3°
28mm
-3°
+3°
425mm
325mm
min200mm-max450mm
483mm
min200mm-max800mm